No.	Changes and/or Note No.	Date	Intr	No	Changes and/or Note No.	Date	Intr

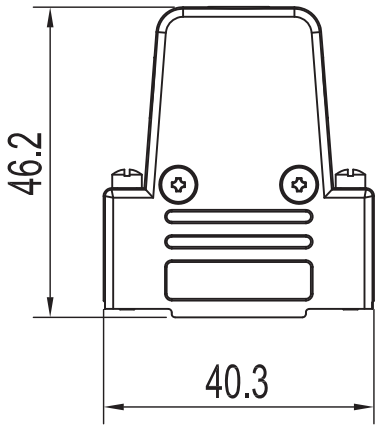

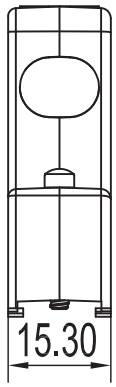

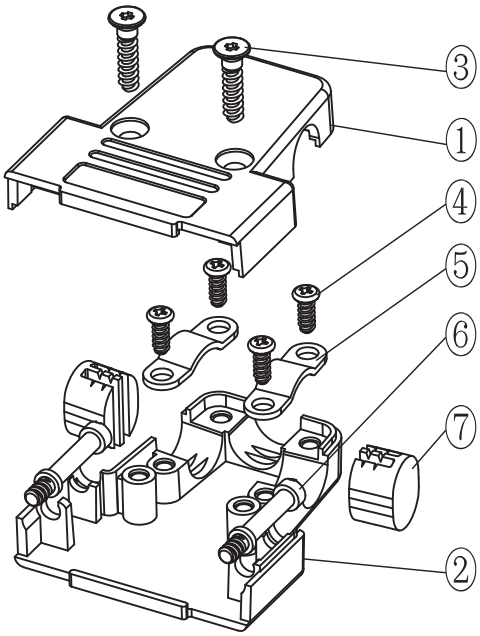

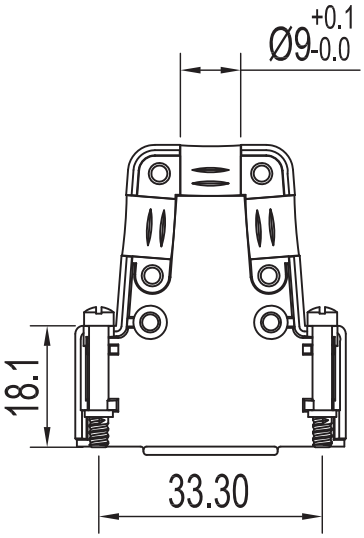

Part Number:	Description:	Pack:
6550-0101-02	TRI15-P-K	Kit
6551-0101-02	TRI15-P	Bulk

Item	QTY	Part description
1	1	TRI15-Upper cover
2	1	TRI15-Lower cover
3	2	GB/T 846 ST2.9x13 self Tapping screw
4	4	GB/T 845 ST2.9x6 self Tapping screw
5	2	Cable clamp
6	2	UNC 4-40X18.1 Jackscrew
7	2	Multi Large Blank D3-15 Blanking plug

DATE:	DRAWN:	SCALE:	MATERIAL TYPE:	GENERAL TOLERANCES UNILESS OTHERWISE STATED
2011-04-18	MRR			LINEAR 0 ±0.20 0.0 ±0.15 0.00 ±0.10 ANGULAR ±0°30' ALL DIMEMSIONS IN mm THIRD ANGLE PROJECTION
	APPROVED:		REPLACES:	

encitech connectors AB

TRI-P-SERIES

DRAWING No: 6688-9586